FIBERGLASS ENTRY DOOR SLAB · CONTEMPORARY · PREMIUM BUILD

Contemporary 16 Fiberglass Door

32" x 80" nominal (2/8 x 6/8) · Actual slab 31-3/4" x 79" x 1-3/4"

Scan to view this door online: current options, pricing and install guides

FIG. 1 ELEVATION AND EDGE VIEW
Exterior face shown. Drawn to scale; dimensions are actual, in inches.

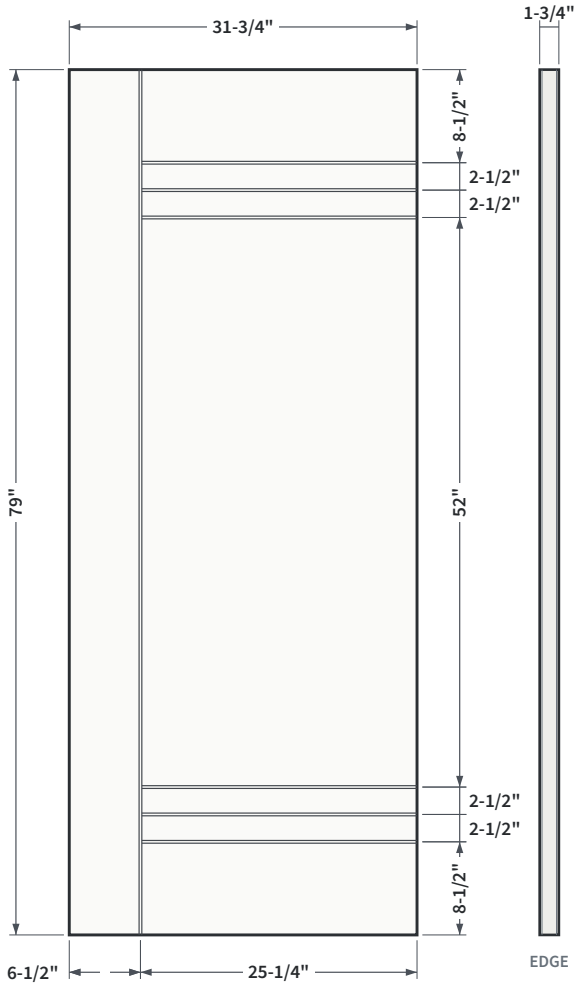

EXTERIOR FACE

FACE

Design	One vertical groove 6-1/2" from the edge; triple horizontal grooves at 2-1/2" spacing near the top and bottom
Grooves	1/4" wide in a flush skin; centerline dimensions on Fig. 1

DIMENSIONS

Nominal size	32" x 80" (2/8 x 6/8)
Actual slab	31-3/4" W x 79" H x 1-3/4" thick
Grooves	1/4" wide; dimensions are to groove centerlines
Prehung unit	About 33-1/2" x 81-3/4" (inswing or saddle sill), 33-1/2" x 80-3/4" (bumper sill)

CONSTRUCTION

Build	Premium build
Stiles	Full-length 4" LVL lock and hinge stiles, composite PVC edge cap
Rails	Composite top and bottom rails; bottom rail kerfed for a drive-in sweep
Core	Foamed-in-place polyurethane, 2.2 lb/cu ft
Skins	Compression-molded fiberglass
Texture	White Satin Smooth (paint grade) or Tan Fine Grain woodgrain
Edges	Square edge; reversible for left- or right-hand swing

PERFORMANCE

U-factor / SHGC	0.16 / 0.01 (NFRC 100 / 200)
ENERGY STAR 7.0	All U.S. climate zones
Design pressure	Inswing +65 / -70 psf; outswing ±65 psf
Impact rating	Not impact rated
Fire rating	Not fire rated

Thermal: NFRC calculated ratings for an opaque premium-build fiberglass flush door. Design pressure per Florida Product Approval FL47925 (non-impact).

32" x 80" is the nominal trade size; all dimensions shown are actual. Specifications are subject to change without notice. Verify local code requirements before installation.

STANDARD HARDWARE PREPARATION

Ordered as Standard Prep. Blank (no prep) and custom prep to match an existing door are also available.

FIG. 2 LOCATIONS
From top of door, exterior view

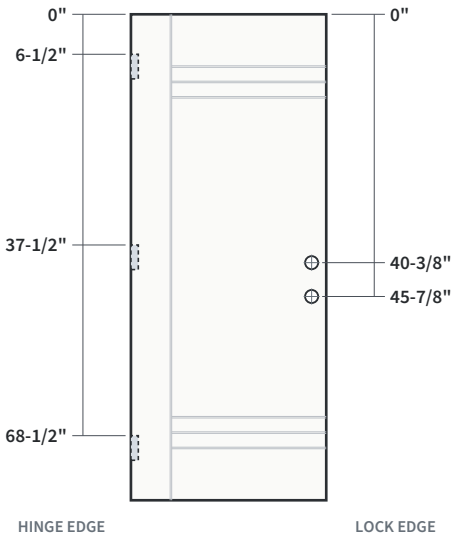

FIG. 3 LOCK EDGE DETAIL
Cutaway at the lock stile

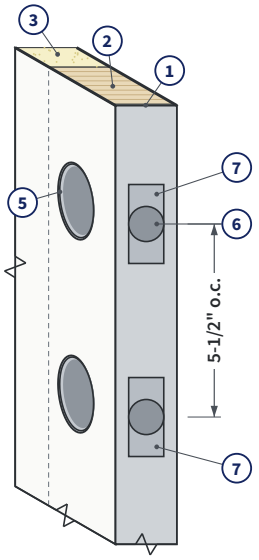

FIG. 4 HINGE EDGE DETAIL
Universal prep; top hinge shown, all three match

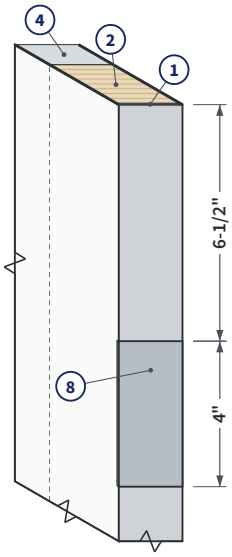

1. Composite PVC edge cap on both stiles
2. Full-length 4" LVL lock and hinge stiles; solid wood behind every bore, mortise and screw
3. Foamed-in-place polyurethane core, 2.2 lb/cu ft
4. Composite top and bottom rails
5. (2) 2-1/8" diameter face bores at 2-3/8" backset, 5-1/2" on center
6. (2) 1" edge bores for deadbolt and latch
7. Deadbolt and latch face prep: 1" x 2-1/4" x 5/32" deep, 1/4" radius corners
8. Universal hinge prep: 4" mortise, .100" deep, routed through the full edge with no screw holes, so the slab hangs either hand

HINGE PREP

Hinges	(3) 4" butt hinges, universal prep (no screw holes); 5/8" radius, 1/4" radius or square corners
Locations	6-1/2", 37-1/2", 68-1/2" from top of door to top of mortise

LOCK PREP

Bore centers	Deadbolt 40-3/8", latch 45-7/8" from top of door
Backset	2-3/8" standard; 2-3/4" on request

FINISHING

Satin Smooth: bonding primer, then premium exterior acrylic latex paint. **Fine Grain woodgrain:** gel stain made for fiberglass, then a polyurethane topcoat with UV inhibitor (or paint over a bonding primer). **Finish all six sides** promptly after delivery. Avoid very dark colors in direct sun.

TRIMMING

This door is not a trimmable model. If needed, it can be trimmed up to **1/2" off the bottom only**; seal the cut edge and, ideally, cover it with a U-style door sweep. **Do not trim the top or sides.** Trimming a door that is not sold as trimmable voids the warranty, and modified products cannot be returned.

PEASE DOORS 20-YEAR LIMITED WARRANTY

Covers the door slab against defects in material and workmanship that make the product unfit for normal use. Valid for products purchased and installed in the USA with original proof of purchase. Requires proper storage, finishing and installation. Not valid when installed behind a storm door.

Year	1	2-3	4-6	7	8	9	10	11-20
Coverage	100%	90%	80%	70%	60%	50%	40%	30%

Share of replacement cost covered, by year after purchase.
Full terms and claims: peasedoors.com/pages/warranty

32" x 80" is the nominal trade size; all dimensions shown are actual. Specifications are subject to change without notice. Verify local code requirements before installation.