STEEL ENTRY DOOR SLAB · WOOD EDGE · FACTORY PRIMED

2 Panel Steel Door, Wood Edge

32" x 96" nominal (2/8 x 8/0) · Actual slab 31-3/4" x 95" x 1-3/4"

Scan to view this door online: current options, pricing and install guides

FIG. 1 ELEVATION AND EDGE VIEW

Exterior face shown. Drawn to scale; dimensions are actual, in inches.

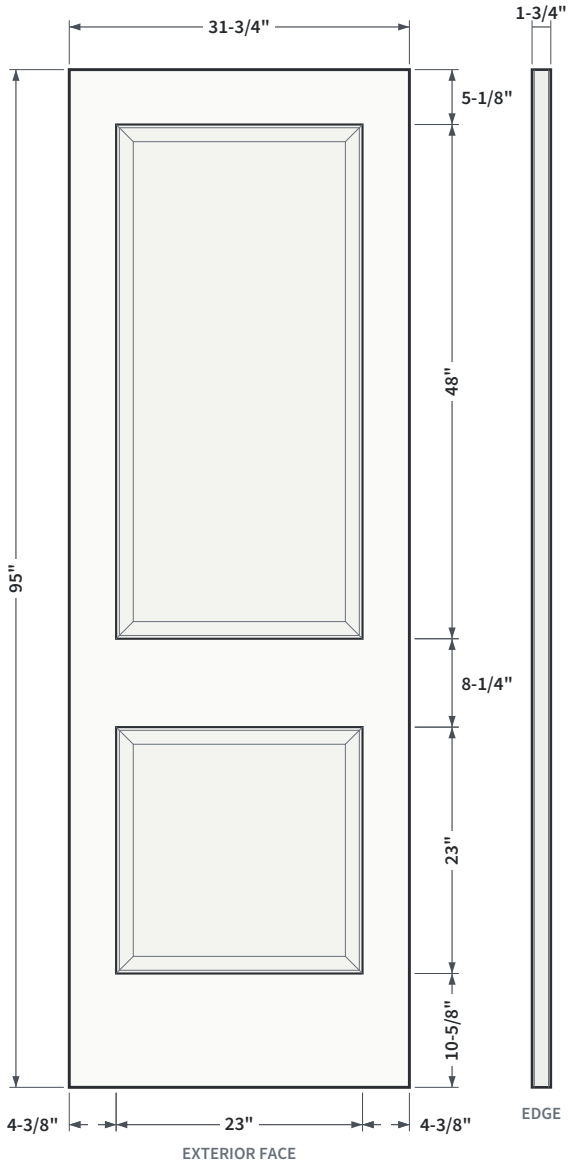

DIMENSIONS

Nominal size	32" x 96" (2/8 x 8/0)
Actual slab	31-3/4" W x 95" H x 1-3/4" thick
Stiles	4-3/8" each side, to the panel field
Rails	Top 5-1/8" · bottom 10-5/8"
Panels	23" x 48", 23" x 23", top to bottom
Prehung unit	About 33-1/2" x 97-3/4" (inswing or saddle sill), 33-1/2" x 96-3/4" (bumper sill)

CONSTRUCTION

Build	Wood edge: exposed spruce/pine/fir stiles
Skins	24-gauge G40 hot-dipped galvanized steel
Perimeter	Spruce/pine/fir wood stiles and rails; bottom rail kerfed for a drive-in sweep
Lock block	4" x 24" pine
Core	Polyurethane foam, 2.2 lb/cu ft
Finish	Factory primed (polyester), paint grade
Panels	Embossed panels pressed into the steel skins
Edges	Square edge; reversible for left- or right-hand swing

PERFORMANCE

U-factor / SHGC	0.13 / 0.01 (NFRC 100 / 200)
ENERGY STAR 7.0	All U.S. climate zones
Impact rating	Not impact rated
Fire rating	Available with a 20-minute fire-rated label; contact Pease if you need a labeled door

Thermal: NFRC calculated ratings for insulated steel, embossed panel. Design pressure is not published for this steel door.

PANEL LAYOUT

Design	Two raised panels, tall over short
Panels	Embossed into the steel skin; sizes on Fig. 1 are to the outer edge of each panel

32" x 96" is the nominal trade size; all dimensions shown are actual. Specifications are subject to change without notice. Verify local code requirements before installation.

STANDARD HARDWARE PREPARATION

Ordered as Standard Prep. Blank (no prep) and custom prep to match an existing door are also available.

FIG. 2 LOCATIONS
From top of door, exterior view

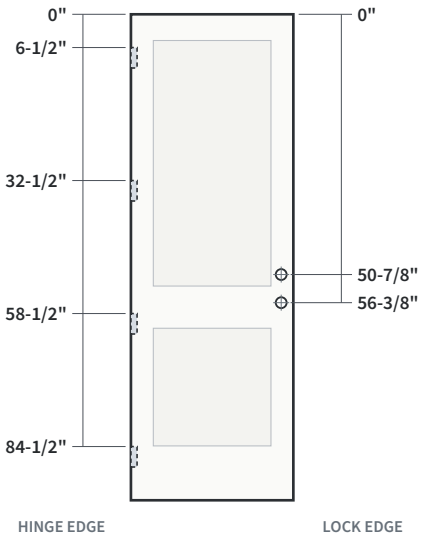

FIG. 3 LOCK EDGE DETAIL
Cutaway at the lock stile

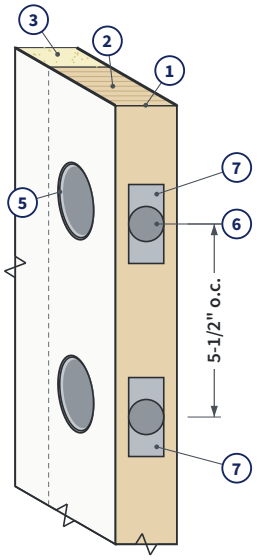

FIG. 4 HINGE EDGE DETAIL
Universal prep; top hinge shown, all four match

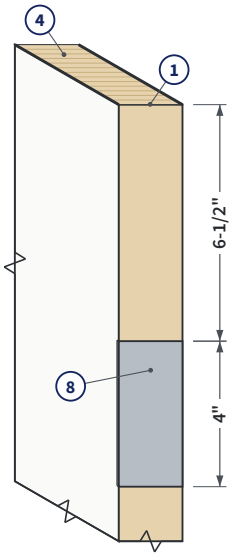

1. Exposed spruce/pine/fir wood edge on both stiles
2. Pine lock block, 4" x 24", behind the lock bores
3. Polyurethane foam core, 2.2 lb/cu ft, between 24-gauge galvanized steel skins
4. Wood top and bottom rails; bottom rail kerfed for a drive-in sweep
5. (2) 2-1/8" diameter face bores at 2-3/8" backset, 5-1/2" on center
6. (2) 1" edge bores for deadbolt and latch
7. Deadbolt and latch face prep: 1" x 2-1/4"
8. Universal hinge prep: 4" mortise routed through the full edge with no screw holes, so the slab hangs either hand

HINGE PREP

Hinges	(4) 4" butt hinges, universal prep (no screw holes); 5/8" radius, 1/4" radius or square corners
Locations	6-1/2", 32-1/2", 58-1/2", 84-1/2" from top of door to top of mortise

LOCK PREP

Bore centers	Deadbolt 50-7/8", latch 56-3/8" from top of door
Backset	2-3/8" standard; 2-3/4" on request

FINISHING

Factory primed; the primer is not a finish coat. Lightly sand with 120 to 220 grit, wash with mild detergent and let dry, then apply an exterior acrylic latex paint rated for metal. **Finish all six sides** promptly after installation. Paint only; do not stain. Light to medium colors are recommended in direct sun.

TRIMMING

Do not trim. Steel doors are made to exact size; cutting exposes the core and edges and invites corrosion. Trimming voids the warranty, and modified products cannot be returned.

PEASE DOORS 20-YEAR LIMITED WARRANTY

Covers the door slab against defects in material and workmanship that make the product unfit for normal use. Valid for products purchased and installed in the USA with original proof of purchase. Requires proper storage, finishing and installation. Not valid when installed behind a storm door.

Year	1	2-3	4-6	7	8	9	10	11-20
Coverage	100%	90%	80%	70%	60%	50%	40%	30%

Share of replacement cost covered, by year after purchase.
Full terms and claims: peasedoors.com/pages/warranty

32" x 96" is the nominal trade size; all dimensions shown are actual. Specifications are subject to change without notice. Verify local code requirements before installation.

GLASS CUTOUT OPTIONS

This door can be cut out in our shop to take door glass in any of the sizes below (2 options). Each drawing shows where the cutout sits on this 31-3/4" x 95" slab, exterior face.

Cutout (glass opening) · Outside of frame (how we size glass on our site) · Dimensions: top of door to top of cutout; edge of door to cutout

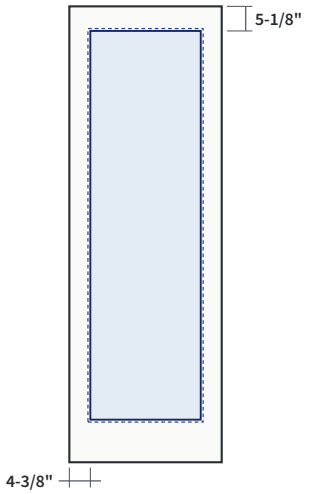

23" x 81"

Tall Full Lite

Glass 22" x 80"
Frame 24" x 82"
Location 5-1/8" from top; 4-3/8" from each edge
SKU ZCUT-GFL-2381

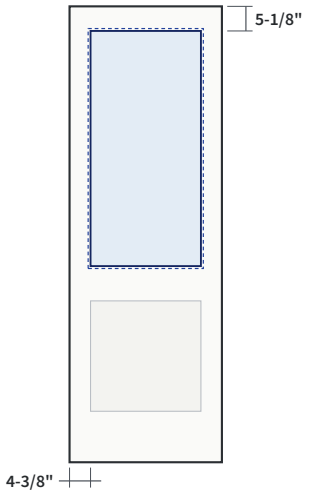

23" x 49"

3/4 Lite

Glass 22" x 48"
Frame 24" x 50"
Location 5-1/8" from top; 4-3/8" from each edge
SKU ZCUT-G34-2349

- Sizes are named by the **cutout**. To match glass you already have, measure the **outside of the plastic frame** (dashed outline); it is 1" larger than the cutout each way.
- Cutout locations follow the ODL door glass standard: centered left to right and measured from the top of the door. Cutouts are made in our shop and are not returnable.

32" x 96" is the nominal trade size; all dimensions shown are actual. Specifications are subject to change without notice. Verify local code requirements before installation.