FIBERGLASS ENTRY DOOR SLAB · PANEL · PREMIUM BUILD

2 Panel 3/4 Fiberglass Door

32" x 80" nominal (2/8 x 6/8) · Actual slab 31-3/4" x 79" x 1-3/4"

Scan to view this door online: current options, pricing and install guides

FIG. 1 ELEVATION AND EDGE VIEW

Exterior face shown. Drawn to scale; dimensions are actual, in inches.

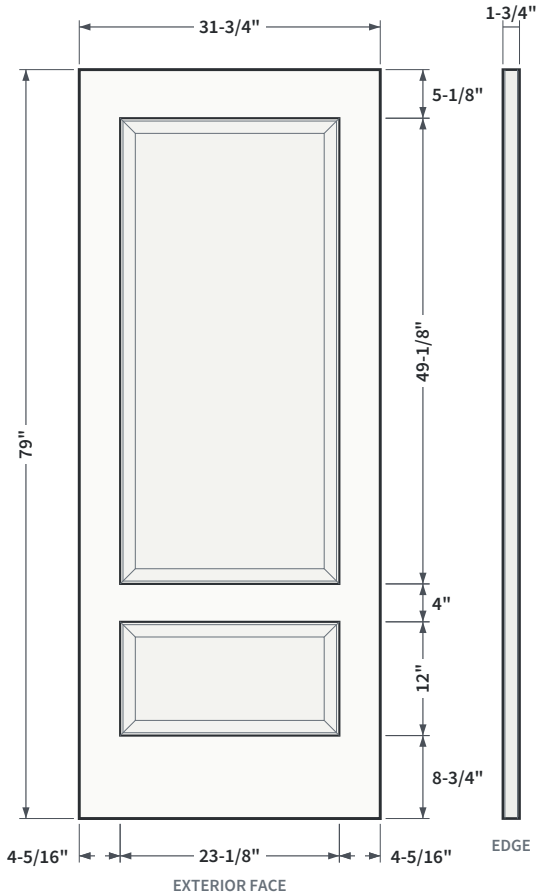

FIG. 2 RAISED PANEL PROFILE

A decorative bead at the stile, a cove down to the panel edge, then a long, shallow slope rises to the raised field. .49" deep, 2.38" wide.

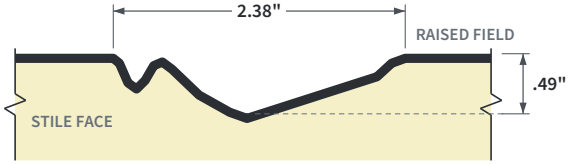

PANEL LAYOUT

Design	Tall raised panel over a short raised panel
Panels	Molded into the fiberglass skin; sizes on Fig. 1 are to the outer edge of each panel

DIMENSIONS

Nominal size	32" x 80" (2/8 x 6/8)
Actual slab	31-3/4" W x 79" H x 1-3/4" thick
Stiles	4-5/16" each side, to the panel field
Rails	Top 5-1/8" · bottom 8-3/4"
Panels	23-1/8" x 49-1/8", 23-1/8" x 12", top to bottom
Prehung unit	About 33-1/2" x 81-3/4" (inswing or saddle sill), 33-1/2" x 80-3/4" (bumper sill)

CONSTRUCTION

Build	Premium build
Stiles	Full-length 4" LVL lock and hinge stiles, composite PVC edge cap
Rails	Composite top and bottom rails; bottom rail kerfed for a drive-in sweep
Core	Foamed-in-place polyurethane, 2.2 lb/cu ft
Skins	Compression-molded fiberglass
Texture	White Satin Smooth (paint grade) or Tan Rift Cut woodgrain
Panel profile	Raised panel: bead, cove and sloped bevel, .49" deep (Fig. 2)
Edges	Square edge; reversible for left- or right-hand swing

PERFORMANCE

U-factor / SHGC	0.17 / 0.01 (NFRC 100 / 200)
ENERGY STAR 7.0	All U.S. climate zones
Design pressure	Inswing +65 / -70 psf; outswing ±65 psf
Impact rating	Not impact rated
Fire rating	Not fire rated

Thermal: NFRC calculated ratings for an opaque premium-build fiberglass panel door. Design pressure per Florida Product Approval FL47925 (non-impact).

32" x 80" is the nominal trade size; all dimensions shown are actual. Specifications are subject to change without notice. Verify local code requirements before installation.

STANDARD HARDWARE PREPARATION

Ordered as Standard Prep. Blank (no prep) and custom prep to match an existing door are also available.

FIG. 3 LOCATIONS
From top of door, exterior view

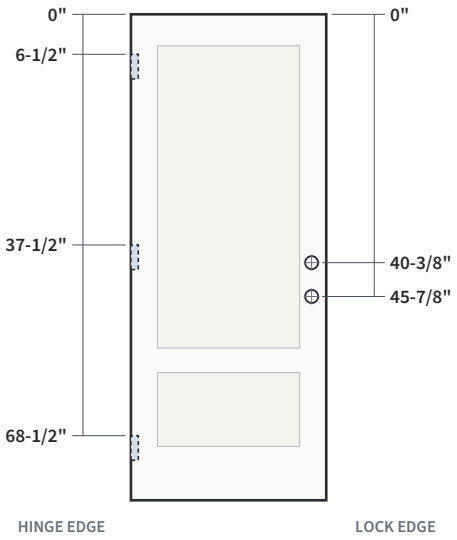

FIG. 4 LOCK EDGE DETAIL
Cutaway at the lock stile

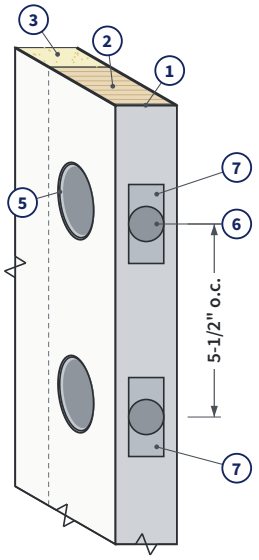

FIG. 5 HINGE EDGE DETAIL
Universal prep; top hinge shown, all three match

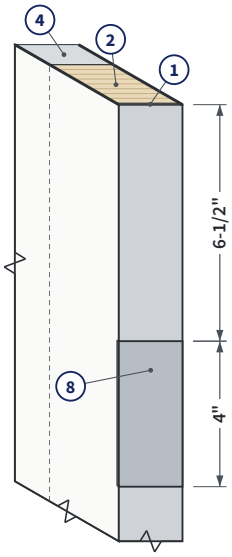

1. Composite PVC edge cap on both stiles
2. Full-length 4" LVL lock and hinge stiles; solid wood behind every bore, mortise and screw
3. Foamed-in-place polyurethane core, 2.2 lb/cu ft
4. Composite top and bottom rails
5. (2) 2-1/8" diameter face bores at 2-3/8" backset, 5-1/2" on center
6. (2) 1" edge bores for deadbolt and latch
7. Deadbolt and latch face prep: 1" x 2-1/4" x 5/32" deep, 1/4" radius corners
8. Universal hinge prep: 4" mortise, .100" deep, routed through the full edge with no screw holes, so the slab hangs either hand

HINGE PREP

Hinges	(3) 4" butt hinges, universal prep (no screw holes); 5/8" radius, 1/4" radius or square corners
Locations	6-1/2", 37-1/2", 68-1/2" from top of door to top of mortise

LOCK PREP

Bore centers	Deadbolt 40-3/8", latch 45-7/8" from top of door
Backset	2-3/8" standard; 2-3/4" on request

FINISHING

Satin Smooth: bonding primer, then premium exterior acrylic latex paint. **Rift Cut woodgrain:** gel stain made for fiberglass, then a polyurethane topcoat with UV inhibitor (or paint over a bonding primer). **Finish all six sides** promptly after delivery. Avoid very dark colors in direct sun.

TRIMMING

This door is not a trimmable model. If needed, it can be trimmed up to **1/2" off the bottom only**; seal the cut edge and, ideally, cover it with a U-style door sweep. **Do not trim the top or sides.** Trimming a door that is not sold as trimmable voids the warranty, and modified products cannot be returned.

PEASE DOORS 20-YEAR LIMITED WARRANTY

Covers the door slab against defects in material and workmanship that make the product unfit for normal use. Valid for products purchased and installed in the USA with original proof of purchase. Requires proper storage, finishing and installation. Not valid when installed behind a storm door.

Year	1	2-3	4-6	7	8	9	10	11-20
Coverage	100%	90%	80%	70%	60%	50%	40%	30%

Share of replacement cost covered, by year after purchase.
Full terms and claims: peasedoors.com/pages/warranty

32" x 80" is the nominal trade size; all dimensions shown are actual. Specifications are subject to change without notice. Verify local code requirements before installation.

GLASS CUTOUT OPTIONS

This door can be cut out in our shop to take door glass in any of the sizes below (3 options). Each drawing shows where the cutout sits on this 31-3/4" x 79" slab, exterior face.

Cutout (glass opening) · Outside of frame (how we size glass on our site) · Dimensions: top of door to top of cutout; edge of door to cutout

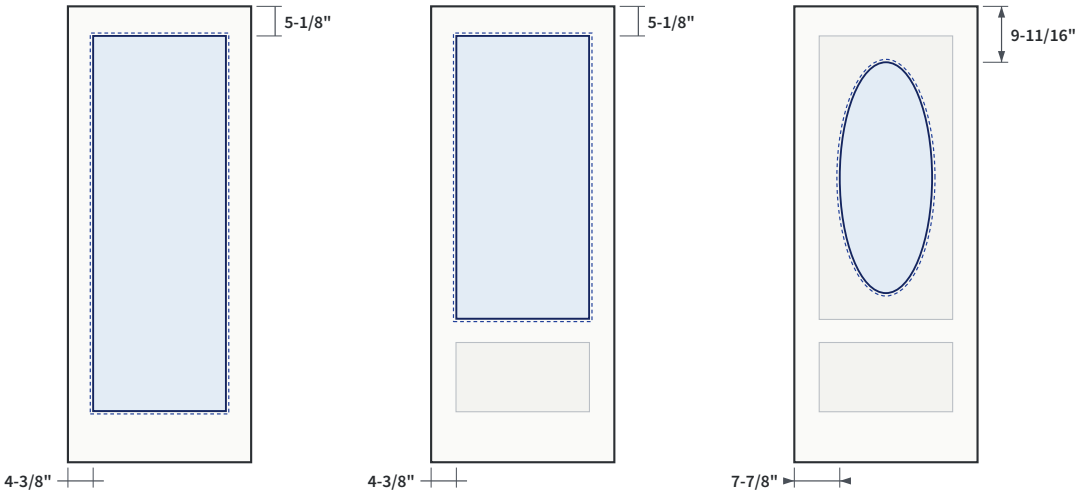

23" x 65"
Full Lite
Glass 22" x 64"
Frame 24" x 66"
Location 5-1/8" from top; 4-3/8" from each edge
SKU ZCUT-GFL-2365

23" x 49"
3/4 Lite
Glass 22" x 48"
Frame 24" x 50"
Location 5-1/8" from top; 4-3/8" from each edge
SKU ZCUT-G34-2349

16" x 40"
Medium Oval
Glass 15-1/2" x 39-3/8" oval
Frame 17.5" x 41.4"
Location 9-11/16" from top; centered in the upper panel
SKU ZCUT-VAL-MD

• Sizes are named by the **cutout**. To match glass you already have, measure the **outside of the plastic frame** (dashed outline); it is 1" larger than the cutout each way.

• Cutout locations follow the ODL door glass standard: centered left to right and measured from the top of the door. Cutouts are made in our shop and are not returnable.

32" x 80" is the nominal trade size; all dimensions shown are actual. Specifications are subject to change without notice. Verify local code requirements before installation.